# Chapter 6 Nonlinear Systems Random Processes

**Contents**

# 6. Nonlinear Systems: Random Processes

## 6.1 Introduction

In Chapter 5 the input-output characteristics were explored for a linear system excited by a random process. It was seen that the mean of the input process was sufficient to determine the mean of the output process, and correspondingly the autocorrelation function of the input was sufficient to determine the autocorrelation function of the output process. However, there are many elements and systems, especially in communication theory, that are not linear, for example, devices like hard and soft limiters, rectifiers, modulators, and demodulators.

For these type of nonlinearities the autocorrelation functions are, in general, no longer sufficient to characterize the output autocorrelation functions, so it its necessary to introduce the concepts of higher-order correlation functions, cumulants, and higher-order spectrums. This chapter will also identify various classes of nonlinear systems and analyze them with respect to establishing input-output statistical relationships. The presentation will be guided more by what is mathematically tractable than what would be a complete and thorough investigation.

## 6.2 Classification of Nonlinear Systems

Currently no general theory exists that can handle all types of nonlinear systems. Therefore our presentation will contain special methods for analyzing certain classes of nonlinear systems. A hierarchical classification of nonlinear systems has been presented in Zadeh, and although we do not specifically use his nomenclature (type 0, type 1 etc.), the classes we present follow his lower-order classification. Our discussion will include instantaneous nonlinearities(type 0), and various cascades of linear systems and instantaneous nonlinear systems(type 1), including bilinear and trilinear cases. The chapter will conclude with a brief introduction to Volterra functionals for representing general nonlinear systems. The discussion begins with memoryless or zero-memory nonlinear systems.

### 6.2.1 Zero-memory Nonlinear Systems

The zero-memory nonlinear system sometimes referred to as an instantaneous nonlinear system, has an input-output relationship

$$Y(t) = g(X(t)) \tag{6.1}$$

where $g(\cdot)$ is a real-valued function of one variable. The system is instantaneous in that the output at time *t* is determined solely by the input at time *t*. Several common instantaneous nonlinearities that play important roles in communication theory are the half-and full-wave rectifier, half- and full-wave square law devices, and hard and soft limiters as shown in Figure 6.1.

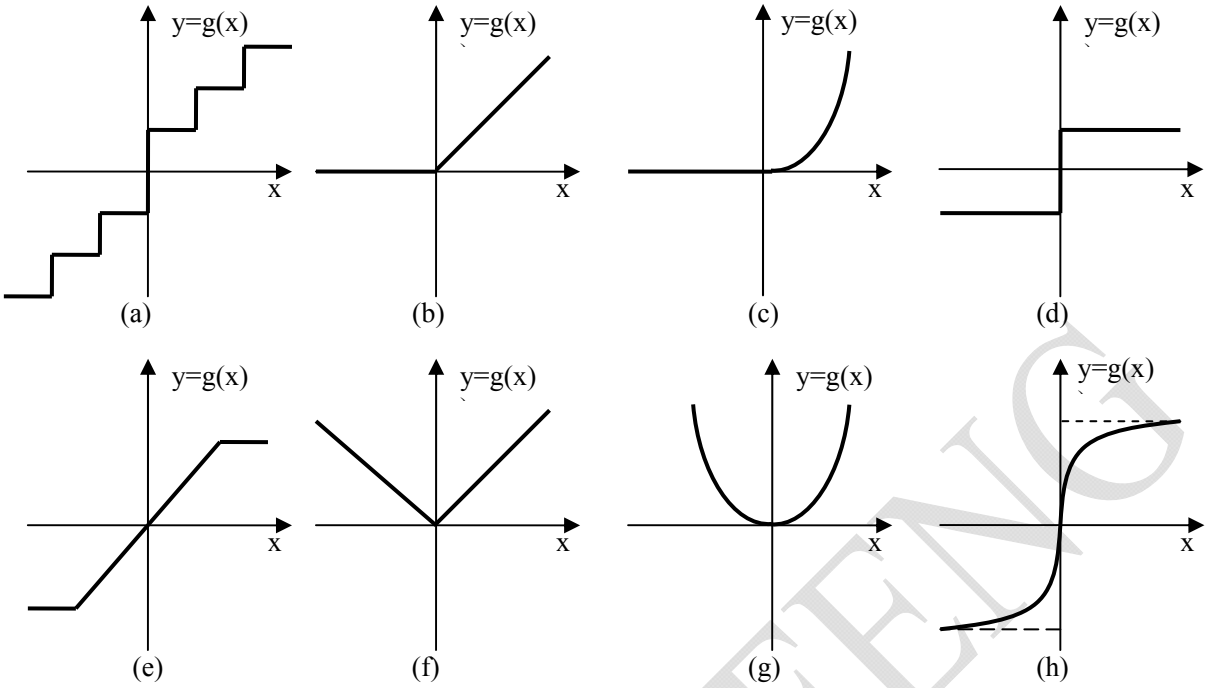


**Figure 6.1** Common instantaneous nonlinearities

(a) quantizer, (b) half wave rectifier, (c) square law half wave device, (d)hard limiter,
(e)saturation, (f)full wave rectifier, (g)square law full wave device, (h)soft limiter.

## 6.2.2 Bilinear Systems

A bilinear system as described by Bendat is a special case of a general Volterra system(to be discussed later), and its input and output are governed by the following integral equation:

$$y(t) \overset{\Delta}{=} L_2[x(t)] = \int_{-\infty}^{\infty}\int_{-\infty}^{\infty} h_2(\tau_1,\tau_2)x(t-\tau_1)x(t-\tau_2)d\tau_1 d\tau_2 \tag{6.2}$$

The system is specified, with respect to input and output, by $h_2(\tau_1,\tau_2)$, which is called the time domain kernel. Notice that if $\tau_1$ and $\tau_2$ are interchanged in the integral, the output can be rearranged as follows:

$$y(t) = \int_{-\infty}^{\infty}\int_{-\infty}^{\infty} h_2(\tau_1,\tau_2)x(t-\tau_1)x(t-\tau_2)d\tau_1 d\tau_2 \tag{6.3}$$

Since the $y(t)$ is still the same, it is seen that the time domain darnel must be symmetrical to have a unique output, that is,

$$h_2(\tau_1,\tau_2) = h_2(\tau_1,\tau_2) \tag{6.4}$$

If the input is a sum of two inputs, $x_1(t)+x_2(t)$, the output $y(t)$ from Eq. (6.2) is

$$y(t) = \int_{-\infty}^{\infty}\int_{-\infty}^{\infty} h_2(\tau_1,\tau_2)[x_1(t-\tau_1)+x_2(t-\tau_1)][x_1(t-\tau_2)+x_2(t-\tau_2)]d\tau_1 d\tau_2 \tag{6.5}$$

By expanding out the product and using the symmetric property of $h_2(\tau_1,\tau_2)$, we obtain an output that is the

sum of responses of the system to $x_1(t)$ and $x_2(t)$ each separately and another term involving the integration of the time domain kernel and the cross product of the two signals as

$$y(t) = L_2[x_1(t)] + L_2[x_2(t)] + 2\int_{-\infty}^{\infty}\int_{-\infty}^{\infty} h_2(\tau_1,\tau_2)x_1(t-\tau_1)x_2(t-\tau_2)]d\tau_1 d\tau_2 \tag{6.6}$$

Therefore, unless the integral term is zero for all time, superposition does not hold for a bilinear system, exemplifying the fact that the system is not a linear system.

Similarly it is easy to show that the response of the system to an input equal to a·x (t), where $a$ is a constant is

$$L_2[ax(t)] = a^2 L_2[x(t)] \tag{6.7}$$

The two properties are given in Eqs.(6.6) and (6.7) are sometimes used as an alternative definition for a bilinear system.

A bilinear system is causal if $h_2(\tau_1,\tau_2) = 0$ for all $\tau_1$ and $\tau_2 < 0$. In taking the absolute values of both sides of (6.2), it is possible to see that the bilinear system will give a bounded output if the input is bounded. Thus the bilinear system will be BIBO stable provided that

$$\int_{-\infty}^{\infty}\int_{-\infty}^{\infty} |h_2(\tau_1,\tau_2)| d\tau_1 d\tau_2 = B \quad \text{where B is finite} \tag{6.8}$$

If the input to the bilinear system specified in Eq. (6.2) is a delta function, the output will be

$$y(t) = \int_{-\infty}^{\infty}\int_{-\infty}^{\infty} h_2(\tau_1,\tau_2)\delta(t-\tau_1)\delta(t-\tau_2)d\tau_1 d\tau_2 = \int_{-\infty}^{\infty} h_2(t,\tau_2)\delta(t-\tau_2)d\tau_2 = h_2(t,t) \tag{6.9}$$

Thus the response to a delta function is not the time domain kernel but is the time domain kernel evaluated on the line $\tau_1 = \tau_2 = t$. Knowing the kernel on just that line is not sufficient information for characterizing the system with respect to input and output, and thus a bilinear system cannot be identified by knowing only its impulse response as was true for a linear system.

The frequency domain kernel $H_2(j\omega_1, j\omega_2)$ for a bilinear system is defined as the two-dimensional Fourier transform of the time domain kernel as follows:

$$H_2(j\omega_1, j\omega_2) = \int_{-\infty}^{\infty}\int_{-\infty}^{\infty} h_2(\tau_1,\tau_2)e^{-j(\omega_1\tau_1+\omega_2\tau_2)}d\tau_1 d\tau_2 \tag{6.10}$$

Characterizing a bilinear system means that we specify either the time domain or frequency domain kernels. Several examples of bilinear systems will be presented. They include a square law device, a square law device, a square law device followed by a linear system, a linear system followed by a square law device and the cascade of linear system, a square law device and linear system. Each of these systems will be examined and the time domain kernels developed for their characterizations by using (6.10).

If the $x(t-\tau_1)$ and $x(t-\tau_2)$ are replaced in (6.10) by their inverse Fourier transforms, the output $y(t)$ is seen to be

$$\begin{aligned} y(t) &= \int_{-\infty}^{\infty}\int_{-\infty}^{\infty} h_2(\tau_1,\tau_2)\left[\frac{1}{2\pi}\int_{-\infty}^{\infty} X(j\omega_1)e^{-j\omega_1(t-\tau_1)}d\omega_1 \times \frac{1}{2\pi}\int_{-\infty}^{\infty} X(j\omega_2)e^{-j\omega_2(t-\tau_2)}d\omega_2\right]d\tau_1 d\tau_2 \\ &= \frac{1}{4\pi^2}\int_{-\infty}^{\infty}\int_{-\infty}^{\infty} X(j\omega_1)X(j\omega_2)\times\left[\int_{-\infty}^{\infty}\int_{-\infty}^{\infty} h_2(\tau_1,\tau_2)e^{-j\omega_1\tau_1}e^{-j\omega_2\tau_2}d\tau_1 d\tau_2\right]e^{j\omega_1\tau_1}e^{j\omega_2\tau_2}d\omega_1\omega_2 \end{aligned} \tag{6.11}$$

The term in square brackets is the frequency domain kernel $H_2(j\omega_1, j\omega_2)$, the first double integral gives the two-dimensional inverse Fourier transform of the product $X(j\omega_1)$, and $X(j\omega_2)$ but evaluated at times $t_1$ and $t_2$, both equaling t. Thus $y(t)$ can be finally written as

$$y(t) = F^{-1}\left(X(j\omega_1)X(j\omega_2)H_2(j\omega_1, j\omega_2)\right)\Big|_{t_1=t, t_2=t} \tag{6.12}$$

In this way it is seen not to be a product of the two-dimensional transforms, so the frequency domain kernel cannot be thought of as the frequency response of the bilinear system.

If we take the one-dimensional Fourier transform directly of the output given in the basic definition (6.2), we obtain

$$\begin{aligned} F[y(t)] &= \int_{-\infty}^{\infty}\left(\int_{-\infty}^{\infty}\int_{-\infty}^{\infty} h_2(\tau_1,\tau_2)x(t-\tau_1)x(t-\tau_2)d\tau_1 d\tau_2\right)e^{-j\omega t}dt \\ &= \int_{-\infty}^{\infty}\int_{-\infty}^{\infty} h_2(\tau_1,\tau_2)\left(\int_{-\infty}^{\infty} x(t-\tau_1)(t-\tau_2)e^{-j\omega t}dt\right)d\tau_1 d\tau_2 \end{aligned} \tag{6.13}$$

The term in parentheses is the one-dimensional Fourier transform of the product of the two time-translated versions of the input signal $x(t)$ and thus is a function of both $\tau_1$ and $\tau_2$. Since this term in parentheses cannot be taken outside the integral signs, it is seen that the result is not the product of the transforms.

Square Law System. Let $x(t)$ and $y(t)$ represent the input and output, respectively, of a square law system as shown in Figure 6.2 and governed by the following input-output relationship:

$$y(t) = x^2(t) \tag{6.14}$$

A logical question at this time is: Is this system a bilinear system and if so what time domain kernel characterizes it? To answer this question, $x(t)$ is written in terms of a delta function as

$$x(t) = \int_{-\infty}^{\infty} x(t-\tau_1)\delta(\tau_1)d\tau_1 \tag{6.15}$$

Substituting this expression for $x(t)$ into (6.14) and rearranging allows the output to be written as

$$\begin{aligned} y(t) = x^2(t) &= \left(\int_{-\infty}^{\infty} x(t-\tau_1)\delta(\tau_1)d\tau_1\right)\left(\int_{-\infty}^{\infty} x(t-\tau_2)\delta(\tau_2)d\tau_2\right) \\ &= \int_{-\infty}^{\infty}\int_{-\infty}^{\infty} \delta(\tau_1)\delta(\tau_2)x(t-\tau_1)(t-\tau_2)d\tau_1 d\tau_2 \end{aligned} \tag{6.16}$$

It is seen that the nonlinear square law system is in the proper integral form,(6.2), and the product of the delta functions can be identified as the time domain kernel

$$h_2(\tau_1,\tau_2) = \delta(\tau_1)\delta(\tau_2) \tag{6.17}$$

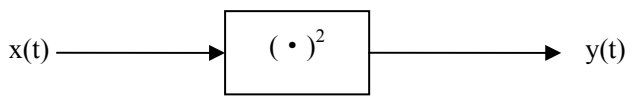


**Figure 6.2** A square law device

The two-dimensional frequency domain dernel can be obtained by taking the Fourier transform of the time domain kernel, which for the $h_2(\tau_1,\tau_2)$ above gives

$$H(j\omega_1, j\omega_2) = 1 \qquad \text{for all } \omega_1 \text{ and } \omega_2 \tag{6.18}$$

Care should be used in interpreting this result as the frequency response of the system for it doesn't represent the same information as the frequency response for the linear system. It is wrong to assume that it means that all signals are passed without alteration , as is the case for an all pass linear system. This is hardly the case for, if the Fourier transform of $y(t)$ is taken, it becomes

$$F[y(t)] = F^2[x^2(t)] = X(j\omega) * X(j\omega) \tag{6.19}$$

Thus the output transform is seen as the convolution of the Fourier transform of the input with itself. This will certainly give a different output transform, and as convolution has a tendency to broaden, the square law device actually creates new output frequency content outside the frequency range of the input. This result is typical of nonlinear systems in general.

**Linear System Followed by a Square Law Device**. Many nonlinear systems can be modeled as a nomemory nonlinear filter followed by a linear system, and the resulting system is no longer memoryless. A special case of this type of system is where the nonlinearity is a square law device as shown in Figure 6.3.

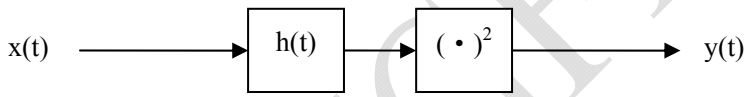


**Figure 6.3** Linear system followed by a Square law device

The output $y(t)$ for this case can be written in terms of the impulse response of the linear system as

$$y(t) = [\int_{-\infty}^{\infty} h(\tau)x(t-\tau)d\tau]^2 = \int_{-\infty}^{\infty}\int_{-\infty}^{\infty} h(\tau_1)h(\tau_2)x(t-\tau_1)x(t-\tau_2)d\tau_1 d\tau_2 \tag{6.20}$$

Thus the linear system followed by a square law device is a bilinear system and the time domain kernel is recognized from Eq.(6.2) as

$$h(\tau_1, \tau_2) = h(\tau_1)h(\tau_2) \tag{6.21}$$

The corresponding frequency domain kernel obtained by taking the two-dimensional transform of the time domain kernel given in Eq.(6.21), is easily seen to be the product of the frequency responses of the linear portions of the bilinear system in each of the variables as

$$H_2(j\omega_1, j\omega_2) = H(j\omega_1)H(j\omega_2) \tag{6.22}$$

This doesn't mean that the frequency response of this particular bilinear system is a product of the frequency response of the bilinear system; it simply gives the frequency domain kernel.

**Square Law Device Followed by a Linear System**. Another combination that comes up frequently is a nonlinear system that is a no memory device followed by a linear system. The special case where the instantaneous system is a square law device is shown in Figure 6.4.

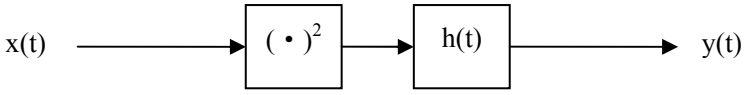


**Figure 6.4** Square law device followed by a Linear time invariant system

To obtain the time domain kernel for this type of nonlinear system the output of the system above is first written as

$$y(t)=\int_{-\infty}^{\infty}h(\tau_1)x^2(t-\tau_1)d\tau_1 \tag{6.23}$$

This can be put in the form of a bilinear system by rewriting $x^2(t)$ in terms of a delta function as

$$x^2(t-\tau_1)=\int_{-\infty}^{\infty}x(t-\tau_1)x(t-\tau_2)\delta(\tau_2-\tau_1)d\tau_2 \tag{6.24}$$

Substituting (6.24) into (6.23) and rearranging gives

$$y(t)=\int_{-\infty}^{\infty}\int_{-\infty}^{\infty}h(\tau_1)\delta(\tau_2-\tau_1)x(t-\tau_1)x(t-\tau_2)d\tau_1 d\tau_2 \tag{6.25}$$

Thus the system specified above is a bilinear system and can be characterized by its time domain kernel as

$$h_2(\tau_1,\tau_2)=h(\tau_1)\delta(\tau_2-\tau_1) \tag{6.26}$$

The time domain kernel is seen to be nonzero only on the line $\tau_2=\tau_1$ , and thus is symmetric by force. By taking the two-dimensional transform of the time domain kernel, the corresponding frequency domain kernel is given by

$$\begin{aligned}H_2(j\omega_1,j\omega_2)&=\int_{-\infty}^{\infty}\int_{-\infty}^{\infty}h(\tau_1)\delta(\tau_2-\tau_1)e^{-j(\omega_1\tau_1+\omega_2\tau_2)}d\tau_1 d\tau_2\\&=\int_{-\infty}^{\infty}h(\tau_1)e^{-j(\omega_1\tau_1+\omega_2\tau_2)}d\tau_1=H\big(j(\omega_1+\omega_2)\big)\end{aligned} \tag{6.27}$$

Thus the frequency domain kernel for this type of nonlinear system is obtained by taking the Fourier transform of the linear system represented by $H(j\omega)$ and replacing the $\omega$ by the sum $\omega_1+\omega_2$.

**Cascade Linear System-Square Law Device-Linear System**. The cascade of a linear system, square law device, and linear system is shown in Figure 6.5. If $h_1(t)$ and $h_2(t)$ represent the impulse responses of the pre- and postfilter, respectively, it is possible to show with a development similar to the two preceding sections that

$$h_2(\tau_1,\tau_2)=\int_{-\infty}^{\infty}h_1(\tau_1-\alpha)h_1(\tau_2-\alpha)h_2(\alpha)d\alpha \tag{6.28}$$

Thus this cascade is a bilinear system as well.

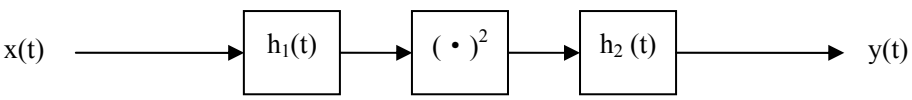


**Figure 6.5** Bilinear system composed of a cascade of linear system-squarer-linear system

By taking the two-dimensional Fourier transform of (6.28), we can see that the frequency domain kernel of this cascade system is given by

$$H_2(j\omega_1, j\omega_2) = H_1(j\omega_1)H_1(j\omega_2)H_2\big(j(\omega_1+\omega_2)\big) \tag{6.29}$$

### 6.2.3 Trilinear Systems

The input-output relationship for a **trilinear system**, described clearly in Bendat[1], is defined as

$$y(t)\underline{\Delta}L[x(t)] = \int_{-\infty}^{\infty}\int_{-\infty}^{\infty}\int_{-\infty}^{\infty} h_3(\tau_1,\tau_2,\tau_3)x(t-\tau_1)x(t-\tau_2)x(t-\tau_3)d\tau_1 d\tau_2 d\tau_3 \tag{6.30}$$

Where $h_3(\tau_1,\tau_2,\tau_3)$ is the **third-order time domain kernel**, and its specification characterizes the system with respect to input-output relationship.

It can be shown, with developments similar to those of the previous sections, that a cuber, and a cuber followed by a linear time-invariant system, and a linear time-invariant system followed by a cuber, and a cascade of linear system, cuber, and linear system, are all special cases of trilinear systems. These special cases are shown in Figure 6.6, and the resulting time domain kernels for these special cases are summarized below:

$$\begin{aligned}
Cuber:&\quad h_3(\tau_1,\tau_2,\tau_3) = \delta(\tau_1)\delta(\tau_2)\delta(\tau_3)\\
Cube-linear:&\quad h_3(\tau_1,\tau_2,\tau_3) = h_2(\tau_1)\delta(\tau_1-\tau_2)\delta(\tau_1-\tau_3)\\
Linear-cuber:&\quad h_3(\tau_1,\tau_2,\tau_3) = h_1(\tau_1)h_2(\tau_2)h_3(\tau_3)\\
Linear-cuber-linear:&\quad h_3(\tau_1,\tau_2,\tau_3) = \int_{-\infty}^{\infty} h_1(\tau_1-\alpha)h_1(\tau_2-\alpha)h_1(\tau_3-\alpha)h_2(\alpha)d\alpha
\end{aligned} \tag{6.31}$$

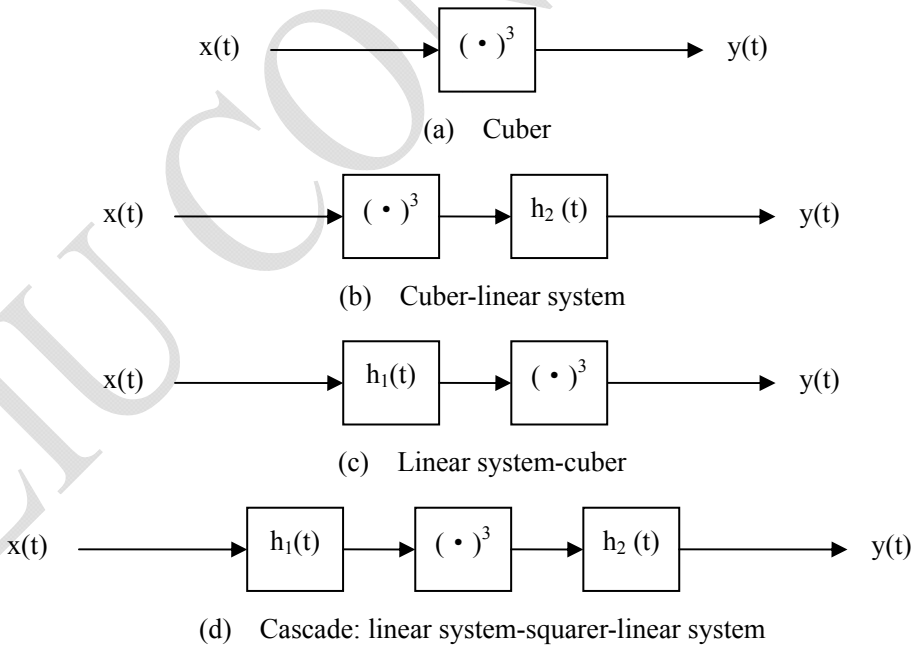


**Figure 6.6** Special Trilinear systems

Their corresponding **frequency domain kernels**, obtained by taking the three-dimensional Fourier transform of the time domain kernels can be determined as follows:

$$\begin{aligned}
Cuber: &\quad H_3(j\omega_1, j\omega_2, j\omega_3) = 1 \\
Cube-linear: &\quad H_3(j\omega_1, j\omega_2, j\omega_3) = H_2\big(j(\omega_1+\omega_2+\omega_3)\big) \\
Linear-cuber: &\quad H_3(j\omega_1, j\omega_2, j\omega_3) = H_1(j\omega_1)H_1(j\omega_2)H_1(j\omega_3) \\
Linear-cuber-linear: &\quad H_3(j\omega_1, j\omega_2, j\omega_3) = H_1(j\omega_1)H_1(j\omega_2)H_1(j\omega_3)\times H_2\big(j(\omega_1+\omega_2+\omega_3)\big)
\end{aligned} \tag{6.32}$$

## 6.2.4 Volterra Representation for General Nonlinear Systems

Volterra showed that the relationship between input $x(t)$ and output $y(t)$ for any nonlinear, causal, time-invariant, finite memory, analytic system, can be written as

$$\begin{aligned}
y(t) = k_0 &+ \int_0^\infty k_1(\tau_1)x(t-\tau_1)d\tau_1 + \int_0^\infty\int_0^\infty k_2(\tau_1,\tau_2)x(t-\tau_1)x(t-\tau_2)d\tau_1 d\tau_2 + \ldots \\
&+ \int_0^\infty\int_0^\infty\cdots\int_0^\infty k_n(\tau_1,\tau_2,\cdots,\tau_n)x(t-\tau_1)\times x(t-\tau_2)\cdots x(t-\tau_n)d\tau_1 d\tau_2\cdots d\tau_n + \ldots
\end{aligned} \tag{6.33}$$

The output $y(t)$ is an infinite sum of a constant and other terms containing one, two, and k-dimensional integrals. The output is thus written as

$$y(t) = y_0 + y_1(t) + y_2(t) + \cdots + y_n(t) + \cdots \tag{6.34}$$

and can be viewed as the sum of the responses from each kernel as shown in Figure 6.7. The first term is a constant and can usually be subtracted off without loss of generality, the second term is a convolution integral representing the linear portion, and the other terms are deviations from the linear at various levels. The $k_0$, $k_1(\tau_1)$,…, $k_n(\tau_1,\tau_2,\cdots,\tau_n)$ are called the **first, second, and nth-order time domain kernels** of the system. From Eq.(6.33) it can be seen that knowing the kernels is sufficient information for the determination of the output for any given input.

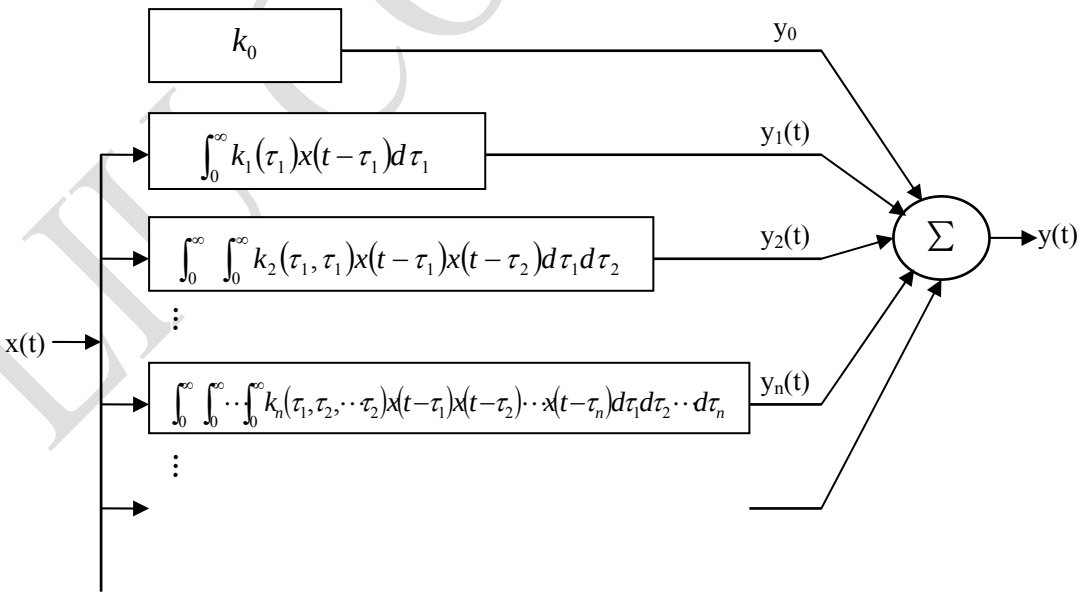


**Figure 6.7** The Volterra representation of a general linear system

The $y_1(t)$ part of the output appears as a convolution of the input with the first-order Volterra kernel and

thus this part can be thought of as the linear part. The $y_2(t)$, taken alone can be shown to be a bilinear system. The word bilinear is used and has a precise mathematical definition as given in Section 6.2.2.

The Fourier transforms of the time domain kernels $k_1(\tau_1)$,…, $k_n(\tau_1,\tau_2,\cdots,\tau_n)$ are called **frequency domain kernels**, and the first three of them are sometimes called linear, bilinear, and trilinear frequency response functions.

The kernels are symmetric in all the tau variables, for example,

$$\begin{aligned} &k_2(\tau_1,\tau_2)=k_2(\tau_2,\tau_1) \\ &k_3(\tau_1,\tau_2,\tau_3)=k_3(\tau_2,\tau_1,\tau_3)=k_3(\tau_1,\tau_3,\tau_2)=k_3(\tau_3,\tau_2,\tau_1) \end{aligned} \tag{6.35}$$

This property of symmetry is a direct result of the fact that in the integral operation given in Eq (6.33), the $x(t-\tau_k)$ can be easily reordered (associativity). Thus $k_n(\tau_1,\tau_2,\cdots,\tau_n)$ must be symmetrical in all its variables. A time domain kernel is called **separable** if

$$k_n(\tau_1,\tau_2,\cdots,\tau_n)=g_1(\tau_1)g_2(\tau_2)...g_n(\tau_n) \tag{6.36}$$

Symmetry does not necessarily imply separability.

It is important to note that the impulse response of bilinear and higher-order nonlinear systems is no longer sufficient information to determine the response to any input as was the case for a linear system. Now, if $x(t)=\delta(t)$ in (6.33), the output $y(t)$ is

$$y(t)=k_0+k_1(t)+k_2(t,t)+\cdots+k_n(t,t,...,t) \tag{6.37}$$

Therefore each of the kernels has a contribution to the impulse response so that the total impulse response does not allow the determination of the kernels but only the sum of the kernels, and only then for the equal time values or $\tau_1=\tau_2=...=\tau_n=t$.

A nonlinear system represented by its kernels can be symbolized by the simple block diagram shown in Figure 6.8 which conveys the same structure as that shown in Figure 6.7.

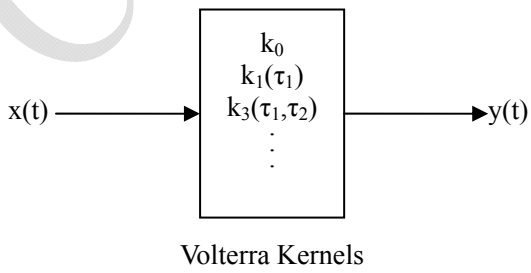


**Figure 6.8** Symbolic representations of Volterra system by block diagram

## 6.3 Random Outputs for Instantaneous Nonlinear System

If the input to an instantaneous nonlinear system is a random process $X(t)$, the output $Y(t)$ is most often a random process as well. If we know the statistical properties of $X(t)$ of the input, a logical question is: What

are the statistical properties of the output process $Y(t)$? We will partially answer this question by finding out what statistical information about the input process is necessary to determine the fisr-order density, mean, and autocorrelation function for the output process and give the output expressions that can be analytically obtained.

## 6.3.1 First-Order Density for Instantaneous Nonlinear Systems

Let the $X(t)$ and $Y(t)$ be the input and output processes, respectively, of an instantaneous nonlinear system governed by the equation

$$Y(t) = g(X(t)) \tag{6.38}$$

Assume that the first-order density, $f(y,t)$, of the input process $X(t)$ is known, and we desire the first-order density, $f(y,t)$, of the output process $Y(t)$. This problem is equivalent to the single function of a single random variable defined at a given time t that was presented in Chapter 2. Thus the solution can be obtained by using any of the techniques described in that chapter. These techniques include the fundamental theorem, the distribution function approach, the auxiliary random variable method, and the Monte Carlo method. In the following example the first-order density functions for the output processes of a full-wave and half-wave square devices are presented.

***Example 6.1***

The full-wave and half-wave square law device are characterized by the input-output relationships $Y(t) = X^2(t)$ and $Z(t) = X^2(t)u(t)$, respectively, and shown in Figure 6.1c and g. If the first-order density of the input process is a Gaussian random process with first-order density function $f(x_t)$ as

$$f(x_t) = \frac{1}{\sqrt{2\pi}\sigma_t}\exp\left(-\frac{x_t^2}{2\sigma_t^2}\right)$$

Find the first order density for out processes $Y(t)$ and $Z(t)$.

***Solution***

For the **full-wave square law device** the first-order density for the random output process $Y(t)$ can be determined using the fundamental theorem for each $t$. If $Y_t$ represents the random variable at time $t$ of the output process and $X_t$ represents the random variable of the input process evaluated at a particular time $t$ we have

$$f(y_t) = \left[\frac{f(x_t)\big|_{x_t=\sqrt{y_t}}}{\left|2\sqrt{y_t}\right|} + \frac{f(x_t)\big|_{x_t=-\sqrt{y_t}}}{\left|-2\sqrt{y_t}\right|}\right]u(y_t) = \frac{1}{\sigma_t\sqrt{2\pi y_t}}\exp\left(-\frac{y_t}{2\sigma_t^2}\right)u(y_t)$$

For the **half-wave square law device** the flat spot for negative $x$ gives a delta function at the origin, and the first-order density of the output process becomes

$$f(z_t)=\left[\frac{f(x_t)\big|_{x_t=\sqrt{z_t}}}{\left|2\sqrt{z_t}\right|}\right]u(z_t)+\left[\int_{\infty}^{0^+} f(x_t)dx_t\right]\delta(z_t)=\frac{1}{\sigma_t\sqrt{2\pi z_t}}\exp\left(-\frac{z_t}{2\sigma_t^2}\right)u(z_t)+\frac{1}{2}\delta(z_t)$$

The result above, although specific for the nonlinearities given, indicate that if a Gaussian process is the input to an instantaneous nonlinearity, the output process will not be a Gaussian random process. This is in contrast to the result for a linear system where a Gaussian random process as an input produces a Gaussian random process on the output.

## 6.3.2 Mean of the Output Process

Let $X(t)$ represent the input and $Y(t)$ the output of an instantaneous nonlinear system characterized by $Y(t)=g(X(t))$. The mean of the output process can be calculated by a number of different methods, but in many problems it can be found conveniently by using one of the following two methods:

Method 1.

$$\eta_Y(t)=E[Y(t)]=E[g(X(t))]=\int_{-\infty}^{\infty} g(x_t)f_{X_t}(x_t)dx_t \tag{6.39a}$$

Method 2.

$$\eta_Y(t)=E[Y(t)]=\int_{-\infty}^{\infty} y_t f_{Y_t}(y_t)dy_t \tag{6.39b}$$

From both methods it is seen that the determination of the mean of the output process requires knowing the first-order density of either the input process or the output process. This means that a higher-order characterization of the input process than just the mean is required. So this result is in sharp contrast to that previously determined for linear systems where the mean of the input process was sufficient to determine the mean of the output process.

***Example 6.2***

Assume that the input to a square law device described by $y=x^2$ is a random process characterized by its first-order density $f_{X_t}(x_t)=e^{-x_t}\mu(x_t)$. Determine the mean of the output process $Y(t)$ defined by $Y(t)=X^2(t)$ by both methods described above in Eqs.(6.39).

***Solution***

Let $Y_t$ be defined as the random variable $Y_t \underline{\Delta} Y(t)$ at time $t$, thus giving $Y_t=X_t^2$. In using method 1, we have

$$E[Y_t]=E[X_t^2]=\int_{-\infty}^{\infty} x_t^2 f_{X_t}(x_t)dx_t=\int_{-\infty}^{\infty} x_t^2 e^{-x_t}dx_t=1$$

In using method 2, we must obtain the first-order density for the output process $Y(t)$. This density can be found by applying the transformation theorem as follows:

$$f_{Y_t}(y_t)=\left.\frac{f_{x_t}(x_t)}{|2x_t|}\right|_{x_t=\sqrt{y_t}}=\frac{1}{2\sqrt{y_t}}e^{-\sqrt{y_t}}\mu(y_t)$$

We can use this density to obtain the mean of the output process as

$$E[Y_t]=\int_{-\infty}^{\infty}y_t f_{Y_t}(y_t)dy_t=\int_{-\infty}^{\infty}y_t\frac{1}{2\sqrt{y_t}}e^{-\sqrt{y_t}}dy_t=1$$

If the density of the output process is not needed, the second method does involve an unnecessary step of first finding the density, since the integral is not made any easier to evaluate.

## 6.3.3 Second-Order Densities for Instantaneous Nonlinearities

Let the random process $X(t)$ be the input to an instantaneous nonlinear system with output process $Y(t)=g(X(t))$. For the two times, $t_1$ and $t_2$, the corresponding random variables for the output are given as

$$Y(t_1)=g(X(t_1)),\qquad Y(t_2)=g(X(t_2)) \tag{6.40}$$

If the random variables $X(t_1)$ and $X(t_2)$ are characterized by their joint probability density function, the basic problem of finding the second-order density of the output process can be solved by applying one of many available problem is actually a simplified application, since there is no coupling for the solution of $x$ in terms of $y$.

***Example 6.3***

Let the random process $X(t)$, characterized by its second-order densities $f(x_1,x_2,t_1,t_2)$, be the input to a square law nonlinearity given by $y=g(x)=x^2$. Find the second-order densities for the output process $Y_t$.

***Solution***

For convenience, the following notation will be used: $X(t_1)=X_1, X(t_2)=X_2, Y(t_1)=Y_1$, and $Y(t_2)=Y_2$. The output random variables can then be written as

$$Y_1=X_1^2,\qquad Y_2=X_2^2$$

If $X_1$ and $X_2$ are continuous random variables and $y=x^2$ is a continuous function, the two-dimensional form of the transformation theorem can be used. For $y_1$ and or $y_2<0$, there are no real roots, so the joint density function is 0. For $y_1>0$ and $y_2>0$, there are four possible pairs of solutions:

$$\begin{matrix}(x_1=\sqrt{y_1}, & x_2=\sqrt{y_2}), & (x_1=\sqrt{y_1}, & x_2=-\sqrt{y_2})\\ (x_1=-\sqrt{y_1}, & x_2=\sqrt{y_2}), & (x_1=-\sqrt{y_1}, & x_2=-\sqrt{y_2})\end{matrix}$$

The joint density from the transformational theorem is

$$f_{Y_1,Y_2}(y_1,y_2)=\sum_{real\ root}\frac{f_{X_1,X_2}(x_1,x_2)}{\begin{vmatrix}2x_1 & 0\\ 0 & 2x_2\end{vmatrix}}$$

Substituting in real roots gives the joint density as

$$f_{Y_1,Y_2}(y_1,y_2)=\frac{1}{4\sqrt{y_1y_2}}\Big[f_{X_1,X_2}\left(\sqrt{y_1},\sqrt{y_2}\right)+f_{X_1,X_2}\left(\sqrt{y_1},-\sqrt{y_2}\right)$$
$$+f_{X_1,X_2}\left(-\sqrt{y_1},\sqrt{y_2}\right)+f_{X_1,X_2}\left(-\sqrt{y_1},-\sqrt{y_2}\right)\Big]$$

The second-order density of the output process of an instantaneous nonlinear system is a function of only the second-order density of the input process. Thus a second0order density characterization of the input process is all that is required to get the second-order characterization of the output process.

## 6.3.4 Autocorrelation Function for Instantaneous Nonlinear Systems

The output autocorrelation function $R_{YY}(t_1,t_2)$ can be calculated by using the second-order density $f(x_1,x_2;t_1,t_2)$ of the input process as follows:

Method 1.

$$\begin{aligned}R_{YY}(t_1,t_2)&=E[Y(t_1)Y(t_2)]=E[g(X(t_1))g(X(t_2))]\\&=\int_{-\infty}^{\infty}\int_{-\infty}^{\infty}g(x_1)g(x_2)f(x_1,x_2;t_1,t_2)dx_1dx_2\end{aligned}\tag{6.41}$$

However, if the second-order density, $f(y_1,y_2;t_1,t_2)$, of the output happens to be known, the output autocorrelation function can be determined by

Method 2.

$$R_{YY}(t_1,t_2)=E[Y(t_1)Y(t_2)]=\int_{-\infty}^{\infty}\int_{-\infty}^{\infty}y_1y_2f(y_1,y_2;t_1,t_2)dy_1dy_2\tag{6.42}$$

As we noted in determining the mean, in general, the second-order densities of the input process are required in order for us to get the autocorrelation function of the output process for an instantaneous nonlinearity. Thus the autocorrelation function of the input process is often not sufficient for determining the autocorrelation of the output. If the input process is a wide sense stationary Gaussian process, then the mean and autocorrelation function of the input determines the second-order densities of the input and thus is sufficient information for determining the autocorrelation function of the output random process.

In the next few examples autocorrelation functions will be found for a number of common communication theory nonlinearities.

***Example 6.4***

Suppose that the input $X(t)$ to a full-wave square law device is a zero mean wide sense stationary Gaussian random process characterized by its autocorrelation function $R_{XX}(\tau)$. Find the autocorrelation function $R_{YY}(\tau)$ for the output process $Y(t)$.

***Solution***

By method 1 the autocorrelation function of the output is calculated directly in terms of the input second-order density using

$$R_{YY}(t_1,t_2)=E\left[X_1^2X_2^2\right]=\int_{-\infty}^{\infty}\int_{-\infty}^{\infty}x_1^2x_2^2f_{X_1X_2}(x_1,x_2)dx_1dx_2$$

Since $X(t)$ is a Gaussian random process, the random variables $X(t_1)=X_1$ and $X(t_2)=X_2$ are jointly Gaussian. Thus the formula above for the autocorrelation is the fourth-order moment determined in Example 2.28. Recall that it is given by

$$E\left[X_1^2X_2^2\right]=\sigma_1^2\sigma_2^2\left(1+\rho_{12}^2\right)$$

Where

$$\sigma_1^2=E\left[X_1^2\right]-E^2\left[X_1\right]=R_{XX}(t_1,t_1)-0=R_{XX}(0)$$

$$\sigma_2^2=E\left[X_2^2\right]-E^2\left[X_2\right]=R_{XX}(t_2,t_2)-0=R_{XX}(0)$$

$$\rho_{12}=\frac{E\left[X_1X_2\right]-E\left[X_1\right]E\left[X_2\right]}{\sigma_1\sigma_2}=\frac{R_{XX}(t_1,t_2)-0}{R_{XX}^{1/2}(0)R_{XX}^{1/2}(0)}=\frac{R_{XX}(t_1-t_2)}{R_{XX}(0)}$$

Substituting the expressions above for $\sigma_1^2,\sigma_2^2$ and $\rho_{12}$ into the fourth-order moment equation gives the output correlation function as

$$R_{XX}^2(t_1,t_2)=R_{XX}^2(0)(1+\frac{R_{XX}(t_1-t_2)}{R_{XX}(0)})=R_{XX}^2(0)+R_{XX}(0)R_{XX}(t_1-t_2)$$

The second-order densities for the output of a square law device were determined in Example 6.3. The autocorrelation function of the output process can now be determined directly from that result using method 2 as follows:

$$R_{YY}(t_1,t_2)=E[Y(t_1)Y(t_2)]=\int_{-\infty}^{\infty}\int_{-\infty}^{\infty}y_1y_2f(y_1,y_2;t_1,t_2)dy_1dy_2$$

Substituting the density function gives

$$\begin{aligned}R_{YY}(t_1,t_2)=\int_0^{\infty}\int_0^{\infty}\frac{\sqrt{y_1y_2}}{4}\Big[&f_{X_1X_2}\left(\sqrt{y_1},\sqrt{y_2}\right)+f_{X_1X_2}\left(\sqrt{y_1},-\sqrt{y_2}\right)\\&+f_{X_1X_2}\left(-\sqrt{y_1},\sqrt{y_2}\right)+f_{X_1X_2}\left(-\sqrt{y_1},-\sqrt{y_2}\right)\Big]dy_1dy_2\end{aligned}$$

The joint probability density function for the random variables $X_1=X(t_1)$ and $X_2=X(t_2)$, defined across the zero mean wide sense stationary process $X(t)$, is Gaussian with second-order density determined from (4.133) as

$$f(x_1,x_2;t_1,t_2)=\frac{1}{2\pi|K|^{1/2}}\exp\left\{-\frac{1}{2}(x-m)^TK^{-1}(x-m)\right\}$$

$$where\quad x=\begin{bmatrix}x_1\\x_2\end{bmatrix},m=\begin{bmatrix}0\\0\end{bmatrix},K=\begin{bmatrix}R_{XX}(0)&R_{XX}(t_1-t_2)\\R_{XX}(t_1-t_2)&R_{XX}(0)\end{bmatrix}$$

Substituting this $f(x_1,x_2)$ into the equation above for $R_{YY}(t_1,t_2)$ gives a very messy integral that needs to be

evaluated. In this example the first method takes an easier path to finding the solution for the autocorrelation function of the output process.

***Example 6.5***

It is desired to find the output autocorrelation for a hard limiter whose nonlinearity is shown in Figure 6.1d if the input process is zero mean wide sense stationary Gaussian random process. The process is characterized by its autocorrelation $R_{XX}(\tau)$. For the random variables $X_1 = X(t_1)$ and $X_2 = X(t_2)$, where $\tau = t_1 - t_2$ its second-order density function, $f(x_1, x_2)$ in terms of the normalized autocorrelation function is known to be

$$f(x_1,x_2) = \frac{1}{2\pi\sqrt{1-\rho_{XX}(\tau)}}\exp\left[\frac{-\left(x_1^2 - 2\rho_{XX}(\tau)x_1x_2 + x_2^2\right)}{1-\rho_{XX}(\tau)}\right]$$

Where

$$\rho_{XX}(\tau) = \frac{R_{XX}(\tau)}{R_{XX}(0)}$$

***Solution***

The autocorrelation function for the output of a hard limiter will be found by using Eq.(6.41):

$$\begin{aligned}
R_{YY}(t_1,t_2) &= E[Y(t_1)Y(t_2)] = E\left[g\left(X\left(t_1\right)\right)g\left(X\left(t_2\right)\right)\right] \\
&= \int_{-\infty}^{\infty}\int_{-\infty}^{\infty} g\left(x_1\right)g\left(x_2\right)f(x_1,x_2)dx_1dx_2 \\
&= \int_0^{\infty}\int_0^{\infty}(1)(1)f(x_1,x_2)dx_1dx_2 + \int_{-\infty}^{0}\int_{-\infty}^{0}(-1)(-1)f(x_1,x_2)dx_1dx_2 \\
&+ \int_{-\infty}^{0}\int_0^{\infty}(-1)(1)f(x_1,x_2)dx_1dx_2 + \int_0^{\infty}\int_{-\infty}^{0}(1)(-1)f(x_1,x_2)dx_1dx_2
\end{aligned}$$

Since $f(x_1, x_2)$ is a probability density function, it is known that it integrates to one as follows:

$$\begin{aligned}
1 &= \int_0^{\infty}\int_0^{\infty} f(x_1,x_2)dx_1dx_2 + \int_{-\infty}^{0}\int_{-\infty}^{0} f(x_1,x_2)dx_1dx_2 \\
&+ \int_{-\infty}^{0}\int_0^{\infty} f(x_1,x_2)dx_1dx_2 + \int_0^{\infty}\int_{-\infty}^{0} f(x_1,x_2)dx_1dx_2
\end{aligned}$$

After solving this equation for the sum of the integrals in the second and fourth quadrant and substituting the result into the equation for autocorrelation function, we have

$$R_{YY}(t_1,t_2) = 2\int_0^{\infty}\int_0^{\infty} f(x_1,x_2)dx_1dx_2 + 2\int_{-\infty}^{0}\int_{-\infty}^{0} f(x_1,x_2)dx_1dx_2 - 1$$

Then, replacing $x_1$ by $-x_1$ in the second integral, we find it to be equal to the first integral from the symmetry of the $f(x_1, x_2)$. So the autocorrelation becomes

$$R_{YY}(t_1,t_2) = 4\int_0^{\infty}\int_0^{\infty} f(x_1,x_2)dx_1dx_2 - 1$$

with $f(x_1, x_2)$ given in the problem statement. The procedure from here is a little messy involving a change of rectangular to polar coordinates, integration, and a change of varivales and a final integral. Details for obtaining this integral are given in Thomas [5], where he showed the final result to be

$$R_{YY}(\tau)=\frac{2}{\pi}\arcsin\left(\frac{R_{XX}(\tau)}{R_{XX}(0)}\right)$$

where $\tau = t_1 - t_2$.

There are several other basic approaches that can be used to solve for the autocorrelation function of the output of instantaneous nonlinear systems. These include the characteristic function method, Price's theorem for Gaussian input processes, and series expansions. Thomas [5] has excellently and thoroughly developed these techniques as well as derived formulas for the autocorrelation functions of the outputs of instantaneous nonlinear systems to a Guassian random process input when the nonlinearity is a full-wave odd, full-wave even, and half-wave *v*th law device given by $y = x^v$. The basic techniques he explored, however, can be applied to any type of instantaneous nonlinearity.

### 6.3.5 Higher-Order Moments

Let $X(t)$ and $Y(t)$ are the input and output processes for an instantaneous nonlinear system given by $Y(t)=g(X(t))$. For a square law device we see that to get the nth-order moment of the output, we must know the input density or know the moments of the input process of order 2n. Thus a higher-order characterization of the input process is necessary. In general, if we consider a polynomial approximation to $g(\cdot)$, we need to know all order moments of the input process to be able to determine the nth order moments of the output process.

### 6.3.6 Stationarity of Output Process

Let $X(t)$ and $Y(t)$ be the input and output processes for an instantaneous nonlinear system given by $Y(t)=g(X(t))$. We are able to make a few general statements concerning the stationarity of the output process with respect to the stationarity of the input process.

(1) If $X(t)$ is stationary in the mean, the output will not necessarily be stationary in the mean.

(2) If $X(t)$ is stationary of any order n, the output process is stationary of order n.

(3) If $X(t)$ is wide sense stationary, then $Y(t)$ is not necessarily wide sense stationary.

## 6.4 Characterizations for Bilinear Systems

If the input to a bilinear system is a random process $X(t)$, the resulting output $Y(t)$ is also a random process. We now explore the statistical relationships that exist between input and output processes. Specifically, we will derive the output mean and autocorrelation function, and the cross correlation between input and output processes. Specifically, we will derive the output mean and autocorrelation function, and the cross correlation between input and output, for a causal bilinear system represented in (6.2) by the input-output relationship.

$$Y(t)=\int_0^{\infty}\int_0^{\infty}h_2(\tau_1,\tau_2)X(t-\tau_1)X(t-\tau_2)d\tau_1 d\tau_2 \tag{6.43}$$

Assume that $h_2(\tau_1,\tau_2)$ is known and that $X(t)$ is a random process characterized by its mean and autocorrelation function, and $E[X(t)]$ and $R_{YY}(t_1,t_2)$, respectively. The output process $Y(t)$ can be partially characterized by its mean $E[Y(t)]$ and autocorrelation function $R_{YY}(t_1,t_2)$ , Also the cross-correlation function $R_{XY}(t_1,t_2)$, between the input and output is important. These partial characterizations are determined for the output of a bilinear system in the following sections.

## 6.4.1 Mean of the Output of a Bilinear System

The mean of the output process is obtained by taking the expected value and integration to give

$$E[y(t)]=\int_0^{\infty}\int_0^{\infty}h_2(\tau_1,\tau_2)E[X(t-\tau_1)X(t-\tau_2)]d\tau_1 d\tau_2 \tag{6.44}$$

The output mean can be determined only if we know the autocorrelation function of the input. Thus a higher-order characterization of the input, other than just the mean, is required for determining the mean of the output of a bilinear system. This is in contrast to the result for linear system, which requires only the mean of the input process to be known to determine the mean of the output process.

If the input process is wide sense stationary with a zero mean and autocorrelation function $R_{XX}(\tau)$ , then the $E[Y(t)]$ from (6.44) reduces to

$$E[y(t)]=\int_0^{\infty}\int_0^{\infty}h_2(\tau_1,\tau_2)R_{XX}(\tau_1-\tau_2)d\tau_1 d\tau_2 \tag{6.45}$$

## 6.4.2 Cross-correlation between Input and Output of a Bilinear System

The cross correlation between the input and output process can be written as

$$\begin{aligned}R_{XY}(t,t+\tau)&=E[X(t)Y(t+\tau)]=E\left[X(t)\int_0^{\infty}\int_0^{\infty}h_2(\tau_1,\tau_2)X(t+\tau-\tau_1)X(t+\tau-\tau_2)d\tau_1 d\tau_2\right]\\&=\int_0^{\infty}\int_0^{\infty}h_2(\tau_1,\tau_2)E[X(t)X(t+\tau-\tau_1)X(t+\tau-\tau_2)d\tau_1 d\tau_2]\end{aligned} \tag{6.46}$$

The cross-correlation function for the input and output of a bilinear system is thus a function of the third-order moments of the input process. Thus, if only the second-order moments were given, we would not have been able to determine the $R_{XY}(t,t+\tau)$.

## 6.4.3 Autocorrelation Function for the Output of a Bilinear System

The autocorrelation function is obtained by taking the expected value of the product of the output at time $t_1$ and the output at time $t_2$ as

$$
\begin{aligned}
R_{YY}(t_1,t_2) &= E[Y(t_1)Y(t_1)] \\
&= E\left[\left(\int_0^\infty\int_0^\infty h_2(\tau_1,\tau_2)X(t_1-\tau_1)X(t_1-\tau_2)d\tau_1 d\tau_2\right)\right. \\
&\quad \left.\times\left(\int_0^\infty\int_0^\infty h_2(\beta_1,\beta_2)X(t_2-\beta_1)X(t_2-\beta_2)d\beta_1 d\beta_2\right)\right] \\
&= \int_0^\infty\int_0^\infty\int_0^\infty\int_0^\infty h_2(\tau_1,\tau_2)h_2(\beta_1,\beta_2)E\left[X(t_1-\tau_1)X(t_1-\tau_2)X(t_2-\beta_1)X(t_2-\beta_2)\right]d\tau_1 d\tau_2 d\beta_1 d\beta_2
\end{aligned}
\tag{6.47}
$$

The autocorrelation function for the output of a bilinear system is thus seen to be a function of the fourth-order moments of the input process. Clearly, a higher-order characterization of the input process—the fourth-order moments—is needed to determine just the output autocorrelation function $R_{YY}(t_1,t_2)$.

## 6.5 Characterizations for Trilinear Systems

We now briefly look at the characteristics of the output $Y(t)$ of a trilinear system to a random input $X(t)$. In particular, the mean, cross-correlation function, and autocorrelation function are presented, and we learn that much higher-order characterizations are required to determine them.

### 6.5.1 Mean of the Output of a Trilinear System

The mean of the output process of a trilinear system is obtained by taking the expected value of both sides of (6.30) and interchanging the order of expected value and integration to give

$$E[y(t)] = \int_{-\infty}^{\infty}\int_{-\infty}^{\infty}\int_{-\infty}^{\infty} h_3(\tau_1,\tau_2,\tau_3)E[x(t-\tau_1)x(t-\tau_2)x(t-\tau_3)]d\tau_1 d\tau_2 d\tau_3 \tag{6.48}$$

The output mean can be determined only if we know the third-order moments of the input process. Thus a higher-order characterization of the input, other than just the mean and autocorrelation function, is required for determining the mean of the output of a trilinear system.

### 6.5.2 Cross-correlation between Input and Output of a Trilinear System

The cross correlation between the input and output process can be written by multiplying (6.30) by $Y(u)$ and taking the expected value operator through the integral signs:

$$E[X(t)Y(u)] = \int_{-\infty}^{\infty}\int_{-\infty}^{\infty}\int_{-\infty}^{\infty} h_3(\tau_1,\tau_2,\tau_3)E[X(t)X(u-\tau_1)X(u-\tau_2)X(u-\tau_3)]d\tau_1 d\tau_2 d\tau_3 \tag{6.49}$$

The cross-correlation function for the input and output of a bilinear system is a function of the fourth-order moments of the input process.

### 6.5.3 Autocorrelation Function for the Output of a Trilinear System

The autocorrelation function is obtained by taking the expected value of the product of the output at time t and the

output at time u as follows:

$$E[Y(t)Y(u)] = E\Big[\int_{-\infty}^{\infty}\int_{-\infty}^{\infty}\int_{-\infty}^{\infty} h_3(\tau_1,\tau_2,\tau_3)X(t-\tau_1)X(t-\tau_2)X(t-\tau_3)]d\tau_1 d\tau_2 d\tau_3$$
$$\times\int_{-\infty}^{\infty}\int_{-\infty}^{\infty}\int_{-\infty}^{\infty} h_3(\alpha_1,\alpha_2,\alpha_3)X(u-\alpha_1)X(u-\alpha_2)X(u-\alpha_3)d\alpha_1 d\alpha_2 d\alpha_3\Big]$$
$$=\int_{-\infty}^{\infty}\int_{-\infty}^{\infty}\int_{-\infty}^{\infty}\int_{-\infty}^{\infty}\int_{-\infty}^{\infty}\int_{-\infty}^{\infty} h_3(\tau_1,\tau_2,\tau_3)h_3(\alpha_1,\alpha_2,\alpha_3)$$
$$\times E\big[X(t-\tau_1)X(t-\tau_2)X(t-\tau_3)X(u-\alpha_1)X(u-\alpha_2)X(u-\alpha_3)\big]d\alpha_1 d\alpha_2 d\alpha_3 d\tau_1 d\tau_2 d\tau_3 \tag{6.50}$$

The autocorrelation function for the output of a trilinear system is seen to be a function of the sixth-order moments of the input process. Thus, unless these sixth-order moments of the input are given, we would not be able to determine the autocorrelation function for the output process of a trilinear system to a random process input.

## 6.6Characterizations for Volterra Nonlinear Systems

If the input to the nonlinear system is a random process, the resulting output is a random process. We explore here the statistical relationships that exist between input and output processes. Specifically in the following example the output mean and autocorrelation function, and the cross correlation between input and output, will be derived for a system represented by a truncated Volterra expansion of the second order.

***Example 6.7***

A nonlinear system is known to be characterized by a second-order Volterra expansion as

$$Y(t) = k_0 + \int_0^{\infty} k_1(\tau)x(t-\tau)d\tau + \int_0^{\infty}\int_0^{\infty} k_2(\tau_1,\tau_2)x(t-\tau_1)x(t-\tau_2)d\tau_1 d\tau_2 \tag{6.51}$$

Assume that $k_0$, $k_1(\tau)$, and $k_2(\tau_1,\tau_2)$ are known and that $X(t)$ is a random process characterized by its mean and autocorrelation functions by $E[X(t)]$ and $R_{XX}(t_1,t_2)$. Find (a) the mean $E[Y(t)]$ of the output process, (b) the cross correlation between the input and output, and (c) the autocorrelation function of the output process.

***Solution***

(a) The mean of the output process is obtained by taking the expected value of both sides of (6.51) and interchanging the order of expected value and integration to give

$$E[Y(t)] = k_0 + \int_0^{\infty} k_1(\tau_1)E[X(t-\tau_1)]d\tau_1 + \int_0^{\infty}\int_0^{\infty} k_2(\tau_1,\tau_2)E[X(t-\tau_1)X(t-\tau_2)]d\tau_1 d\tau_2 \tag{6.52}$$

The output mean can be determined only if we know both the mean of the input process and the autocorrelation function of the input. Thus we require a higher-order characterization of the input. This is in contrast to the result for linear systems which requires only the mean of the input process to determine the mean of the output process.

For the special case where the input process is wide sense stationary which a zero mean and autocorrelation function $R_{XX}(\tau)$, the first integral of (6.52) is zero. The expected value in the second integral can be written in terms of the time difference only:

$$E[Y(t)] = k_0 + \int_0^\infty \int_0^\infty k_2(\tau_1,\tau_2) R_{XX}(\tau_1 - \tau_2) d\tau_1 d\tau_2 \tag{6.53}$$

(b) The cross correlation between the input and output can be written as follows using (6.51) and the definition of the cross-correlation function as

$$\begin{aligned} R_{XY}(t_1,t_2) &= E[X(t_1)Y(t_2)] \\ &= E\left[X(t_1)k_0 + X(t_1)\int_0^\infty k_1(\tau)X(t-\tau)d\tau + X(t_1)\int_0^\infty \int_0^\infty k_2(\tau_1,\tau_2)X(t-\tau_1)X(t-\tau_2)d\tau_1 d\tau_2\right] \end{aligned} \tag{6.54}$$

After multiplying out and taking the expected value operator through the integral sign, we reduce (6.54) to

$$\begin{aligned} R_{XY}(t_1,t_2) &= k_0 E[X(t_1)] + \int_0^\infty k_1(\tau_1) E[X(t_1)X(t_2-\tau_1)]d\tau \\ &\quad + \int_0^\infty \int_0^\infty k_2(\tau_1,\tau_2) E[X(t_1)X(t_2-\tau_1)X(t_2-\tau_2)]d\tau_1 d\tau_2 \end{aligned} \tag{6.55}$$

The cross-correlation function for the input and output of a second-order Volterra system is a function of the first, second, and third-order moments of the input process.

(c) The autocorrelation function is obtained by taking the expected value of the product of the output at time $t_1$ and the output at time $t_2$ as follows:

$$\begin{aligned} R_{YY}(t_1,t_2) &= E[Y(t_1)Y(t_2)] \\ &= E\left[\left(k_0 + \int_0^\infty k_1(\tau_1)E[X(t_1-\tau_1)]d\tau_1 + \int_0^\infty \int_0^\infty k_2(\tau_1,\tau_2)E[X(t_1-\tau_1)X(t_1-\tau_2)]d\tau_1 d\tau_2\right) \right. \\ &\quad \left. \times\left(k_0 + \int_0^\infty k_1(\beta_1)E[X(t_2-\beta_1)]d\beta_1 + \int_0^\infty \int_0^\infty k_2(\beta_1,\beta_2)E[X(t_2-\beta_1)X(t_2-\beta_2)]d\beta_1 d\beta_2\right)\right] \end{aligned} \tag{6.56}$$

Multiplying out the terms in parentheses it is seen that the $R_{YY}(t_1,t_2)$ contains nine terms and depends on the first-through the fourth-order moments of the input process. Thus just knowing the mean and autocorrelation function is not sufficient for determining the autocorrelation function is not sufficient for determining the autocorrelation function of the output process.

## 6.7 Higher-order Characterizations

We have seen that the mean, autocorrelation function, and power spectrum are sufficient for determining the mean, autocorrelation, and power spectrum for the output of linear systems to random processes. For nonlinear systems we have already noted that higher-order properties than the second-order statistics must be defined in order to determine even the output statistical properties of order two. The useful definitions of moment function, cumulant function and higher-order spectra are now presented.

### 6.7.1 Moment Function for Random Processes

The moment function for a random process can be considered to be an extension of the autocorrelation function. The autocorrelation function is the expected value of the product of the random variables defined at two different times, whereas the moment function is the expected value of the product of the random variables defined at more

than two times. Let $t, t+\tau_1, t+\tau_2, ..., t+\tau_{k-1}$ be a comb of times as shown in Figure 6.9, and let $X(t), X(t+\tau_1), ..., X(\tau_{k-1})$ represent random variables from a given random process $X(t)$. The ***kth* order moment function** $M_{XX...X}(t, t+\tau_1, t+\tau_2, ..., t+\tau_{k-1})$ can be defined in terms of the random variables at these times as

$$M_{XX...X}(t, t+\tau_1, t+\tau_2, ..., t+\tau_{k-1}) = E[X(t), X(t+\tau_1), ..., X(t+\tau_{k-1})] \tag{6.57}$$

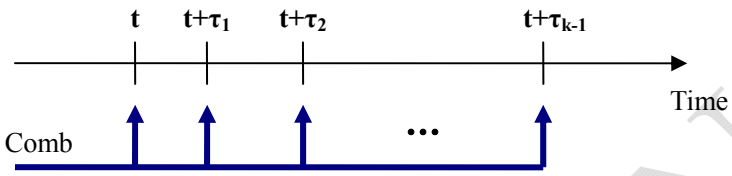


**Figure 6.9** Comb of times for cummulant function definition

In general, the moment function is a function of the k time variables $t, \tau_1, \tau_2, ..., \tau_{k-1}$. We say that a random process $X(t)$ is ***kth* order moment stationary** if the expected value given in (6.57) does not depend on the t variable and is only a function of $\tau_1, \tau_2, ..., \tau_{k-1}$. This property is stronger than stationary in mean and autocorrelation yet weaker than stationarity of order *k*, which would require the equality of all density functions for the random variables at the comb of times and be independent of $t$.

## 6.7.2 Cumulant Function for Random Processes

The ***kth* order cumulant function** $C_{XX...X}(t, t+\tau_1, t+\tau_2, ..., t+\tau_{k-1})$, for a random process $X(t)$, is defined in terms of the cumulants of the random variables $X(t), X(t+\tau_1), ..., X(t+\tau_{k-1})$ for the comb of times specified by

$$C_{XX...X}(t, t+\tau_1, t+\tau_2, ..., t+\tau_{k-1}) \stackrel{\Delta}{=} (-j)^n \frac{\partial^n \ln \Phi(\omega_1, \omega_2, ..., \omega_n)}{\partial\omega_1 \partial\omega_2 ... \partial\omega_n}\Bigg|_{\substack{\omega_1=0 \\ \omega_2=0 \\ \cdots \\ \omega_n=0}} \tag{6.58}$$

Where $\Phi(\omega_1, \omega_2, ..., \omega_n)$ is the joint characterization function for the random variables defined at the comb of times $t, t+\tau_1, t+\tau_2, ..., t+\tau_{k-1}$. The first-, second-, and third-order cumulant functions can be determined using results from Chapter 2 to be

$$\begin{aligned}
C_{XX}(t, t+\tau_1) &= E[X(t)X(t+\tau_1)] \\
C_{XXX}(t, t+\tau_1, t+\tau_2) &= E[X(t)X(t+\tau_1)X(t+\tau_2)] \\
C_{XXXX}(t, t+\tau_1, t+\tau_2, t+\tau_3) &= E[X(t)X(t+\tau_1)X(t+\tau_2)X(t+\tau_3)] \\
&\quad - C_{XX}(t, t+\tau_1)C_{XX}(t+\tau_2, t+\tau_3) \\
&\quad - C_{XX}(t, t+\tau_2)C_{XX}(t+\tau_1, t+\tau_3) \\
&\quad - C_{XX}(t, t+\tau_3)C_{XX}(t+\tau_1, t+\tau_2)
\end{aligned} \tag{6.59}$$

With $X_1, X_2, ..., X_k$ the random variables defined above for the comb of times and assuming moment stationarity of the proper order, we see that the first four cumulant functions for the process $X(t)$ do not depend on t and can be written as functions of the distances between the teeth of the comb as follows:

$$\begin{aligned} C_{XX}(\tau_1) &= E[X(t)X(t+\tau_1)] \\ C_{XXX}(\tau_1,\tau_2) &= E[X(t)X(t+\tau_1)X(t+\tau_2)] \\ C_{XXXX}(\tau_1,\tau_2,\tau_3) &= E[X(t)X(t+\tau_1)X(t+\tau_2)X(t+\tau_3)] \\ &\quad - C_{XX}(\tau_1)C_{XX}(\tau_2-\tau_3) \\ &\quad - C_{XX}(\tau_2)C_{XX}(\tau_3-\tau_1) \\ &\quad - C_{XX}(\tau_3)C_{XX}(\tau_1-\tau_2) \end{aligned} \tag{6.60}$$

## 6.7.3 Polyspectrum for Random Processes

The power spectral density, or power spetrum, is a partial characterization of a random process and is related to the autocorrelation of a wide sense stationary process through the Fourier transform. In working with processes generated as outputs from nonlinear systems, it is necessary to include higher-order characterizations. For these problems it is useful to define the polyspectrum for a random process which is a higher-order characterization.

The *k*th-order polyspectrum $S_{XX...X}(\omega_1,\omega_2,...,\omega_{k-1})$ of a random process $X(t)$, with moment stationarity of the *k*th order is defined as the (k-1)-dimensional Fourier transform of its kth order cumulant function defined by Eq.(6.58)

Thus for $\omega = [\omega_1,\omega_2,...,\omega_{k-1}]^T$ and $\tau = [\tau_1,\tau_2,...,\tau_{k-1}]^T$, the $S_{XX...X}(\omega_1,\omega_2,...,\omega_{k-1})$ is defined by

$$S_{XX...X}(\omega) \overset{\Delta}{=} \int_{-\infty}^{\infty}\int_{-\infty}^{\infty}...\int_{-\infty}^{\infty} C_{XX...X}(\tau)\exp(-j\omega^T\tau)d\tau \tag{6.61}$$

Notice that this definition uses the Fourier transform of the cumulant function rather than the moment function. The most commonly used polyspectra are the spectrum, bispectrum, and trispectrum. These are given as follows:

Spectrum

$$S_{XX}(\omega_1) = \int_{-\infty}^{\infty} C_{XX}(\tau_1)\exp(-j\omega_1\tau_1)d\tau_1 \tag{6.61}$$

Bispectrum

$$S_{XXX}(\omega_1,\omega_2) = \int_{-\infty}^{\infty}\int_{-\infty}^{\infty} C_{XXX}(\tau_1,\tau_2)\exp(-j(\omega_1\tau_1+\omega_2\tau_2))d\tau_1 d\tau_2 \tag{6.62}$$

Trispectrum

$$S_{XXXX}(\omega_1,\omega_2,\omega_3) = \int_{-\infty}^{\infty}\int_{-\infty}^{\infty}\int_{-\infty}^{\infty} C_{XXXX}(\tau_1,\tau_2,\tau_3)\exp(-j(\omega_1\tau_1+\omega_2\tau_2+\omega_3\tau_3))d\tau_1 d\tau_2 d\tau_3 \tag{6.63}$$

Use of these polyspectra has led to new methods in system identification and detection algorithms. A thorough discussion of polyspectra and the use of the cumulant spectrum is presented in Nikias and Petropuou [10], Mendel [8], and Nikias and Mendel [6].

## 6.8 Summary

It is virtually impossible for our modern-day problems to not involve nonlinear systems. Therefore the main purpose of this chapter was to present a framework for determining various characterizations of output processes of nonlinear systems with random processes as inputs. In Chapter 5 it was shown that output mean and autocorrelation function of a linear time-invariant system could be obtained knowing only the input mean and autocorrelation, respectively, and that the output spectral density could be obtained in the frequency domain by using the transfer function of the system.

It was shown in this chapter that even the simplest nonlinear system, the instantaneous nonlinear system, requires additional statistical information other than just the mean and autocorrelation function, namely the first- and second-order densities of the input process to determine the mean and autocorrelation function of the output process.

A hierarchy of nonlinear systems was presented including the instantaneous nonlinear, bilinear, trilinear, and the general Volterra system. These systems input and output relationships were described in terms of integral equations involving various time domain kernels. This was similar to the description of a linear system in terms of the convolution integral, but for these nonlinear systems the defining integral is represented by a higher -dimensional integral. Analogously, frequency domain kernels were defined that could be used to obtain higher-order spectra for the output.

The transformation theorem for random variables was the basic tool used for finding output characterizations of instantaneous nonlinear systems to random inputs. It was used to obtain the first- and second-order density functions and the mean and autocorrelation function of the output process. It was shown that a first-order density of the input is required to determine just the mean of the output process and that a second-order density of the input process is required to determine the output autocorrelation function. It was also shown that for instantaneous nonlinear systems that an nth order stationary input process produced an nth-order stationary output process. Solving for the output autocorrelation function was, in general, a very complex process even for Gausssian process inputs.

The next level of nonlinearity discussed was the bilinear system. Simple bilinear systems were given as examples and involved a linear system or systems in cascade with a square law device. It was again shown that higher-order characterizations of the input process are required to determine just the output mean and autocorrelation function.

Trilinear and general Volterra nonlinear systems were then presented where inputs and outputs were modeled in terms of first-, second-, and higher-order kernels. Moment and cumulant spectra were defined and their relationships explored.

Missing from our development is the presentation of Weiner functionals which are useful for nonlinear system identification. Basically functionals are selected such that their outputs are orthogonal for Gaussian input processes.

**----------This is the end of Chapter06----------**